برای دریافت اطلاعات بیشتر به www.Ecu118.ir مراجعه کنید
https://telegram.me/Ecu118

COLOR	CODE	COLOR	CODE
BLACK	B	ORANG	O
BROWN	Br	PINK	P
BLUE	L	RED	R
GRAY	GY	WHITE	W
LIGHT GREEN	LG	YELLOW	Y

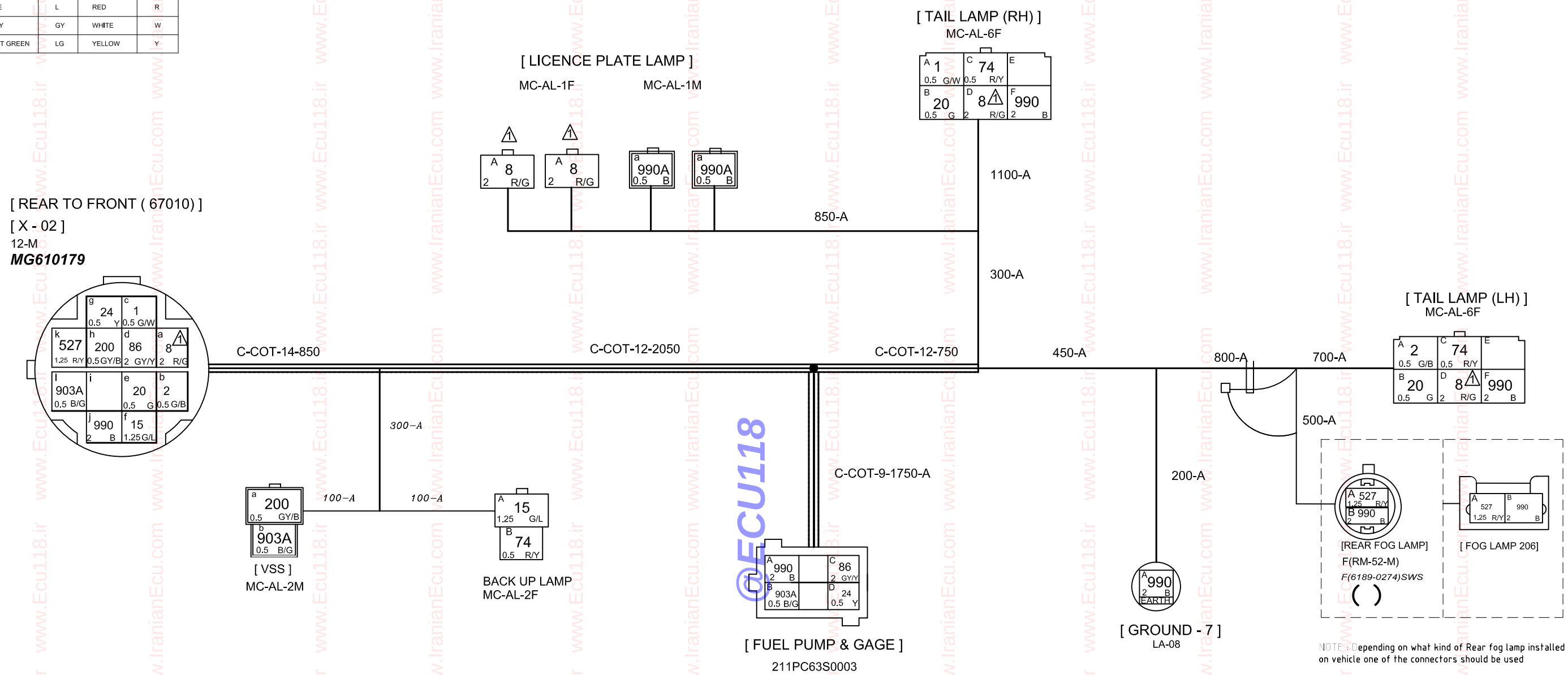

P.CH / ITEM	APPROVE	CHECKER	DRAWN	DESIGNER
COST				
LAW				
NOTE				
P.N				
D.ST				
TOL.				
DIM				
MAT.				
DFM				
DFA				
FMEA				

VIEW

HERE VIEW IS FROM THE TERMINAL SIDE

GEN.TOLERANCE	
NOM.SIZE RENGE	TOL. (mm)
UNDER 200	+10 -5
OVER 200 TO 500	+20 -10
OVER 500 TO 1000	+30 -15
OVER 1000 TO 3000	+40 -20
OVER 3000	+50 -25

SPECIFICATION.

1- THE SPECIFICATIONS ARE BASED ON MAZDA DRAWING STANDARD MES BD 104 AND MAZDA WIRING HARNESS MES PA 67010C. WIRING HARNESS MES BA 205 AND MAZDA CONNECTOR SYMBOLS.

2- THE FOLLOWING ABBREVIATIONS ARE USED FOR MAKER'S NAME

(YZK)= YAZAKI (SWS)= SUMITOMO
(FEC)= FURUKAWA (FJK)= FUJIKURA
(AMP)=AMP (KET)= KET

specification:

VTA : vinyl adhesive taping

C-COT-XX-YYY : (C_COT: longitudinally cut) (XX diameter corrugate , YYY length)

TAPING : DIMENSION - TYPING TYPE

TYPING TYPE : A half wrap windling) , B(coarse winding)

HPC : heat resistance vinyl tube

PVC : vinyl tube

REV	ECN NO.	DATE	REV	NOTE	BY
1	F67-89245	89.05.11	A	CHANGE IN DESIGN	S.AGHAZADEGAN

COATING	COLOR	QUALITY	TREATMENT	FMEA NO.	APPR. BY DRAWING DEPT.
---	---	---	---	---	
MES:---	MES:---	MES:---	MES:---		

DWG. DATE	SCALE	EST. MASS	THICKNESS	MATERIAL	PROJECT NAME
88.12.01	1:1	--- Kg	--- mm	--- {cf: MES---}	---

APPROVED	H. PANAHI TEL: 2316	PART NAME	WIRING REAR HARNESS
CHECKED	A.DASHTI TEL: 2451	PART NO.	PE11 67030 A
DRAWN	M.MASOMI FARD TEL: 2451	DWG NO.	PE1167030
DESIGNED	Eelctronic Dep. A.DASHTI TEL: 2451	PROJ. TYPE	

PRINT SCALE	SHEET	SIZE
YES ☐ NO ☒	1/1	A3

Bahman Motor Center
Product Engineering Dept.